EVB-USB2512BC

Customer Evaluation Design for USB2512B,
QFN36 package

Self-powered, 2-port USB 2.0 HUB, low-cost,
Basic feature set PLUS Support for Battery Charging

Revision History

Revision	Date	Revision Summary	Author
01A	20090305	Initial schematic - from EVB-USB2514QFN36_B	C. Johnson
02A	20090309	Reduced # of cap footprints per VDD18 pin to 2, shorted around optional EMI and ESD devices, changed port disable resistors to 0ohm, grouped and indicated EMI and ESD optional devices, added BC test options for all ports.	C. Johnson
A	20090310	Renumbered & released.	C. Johnson
A01	20091012	Re-drew with updated symbols.	C. Johnson

SMSC - Austin
10900-B Stonelake Blvd.
Austin, TX 78759
512.502.0070

Title: *Evaluation Board for USB2512B with Battery Charging Support*
Part Number: *EVB-USB2512BC*
Size: *B* | Project Name: *BobbyBC* | Rev *A01*
Date: *Tuesday, February 16, 2010* | Sheet 1 of 2

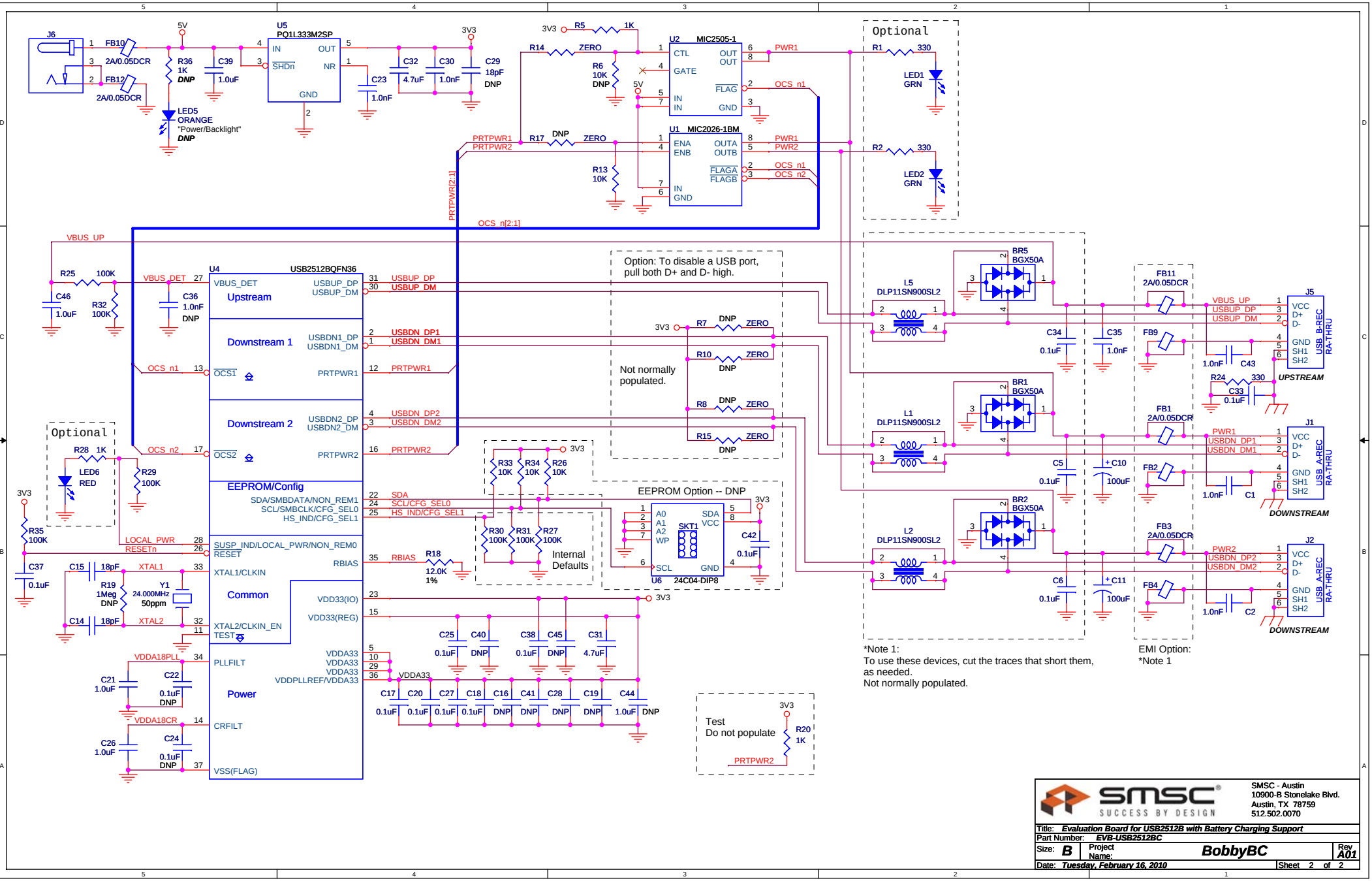

SMSC - Austin
10900-B Stonelake Blvd.
Austin, TX 78759
512.502.0070

Title: *Evaluation Board for USB2512B with Battery Charging Support*
Part Number: *EVB-USB2512BC*
Size: **B** | Project Name: **BobbyBC** | Rev **A01**
Date: *Tuesday, February 16, 2010* | Sheet 2 of 2